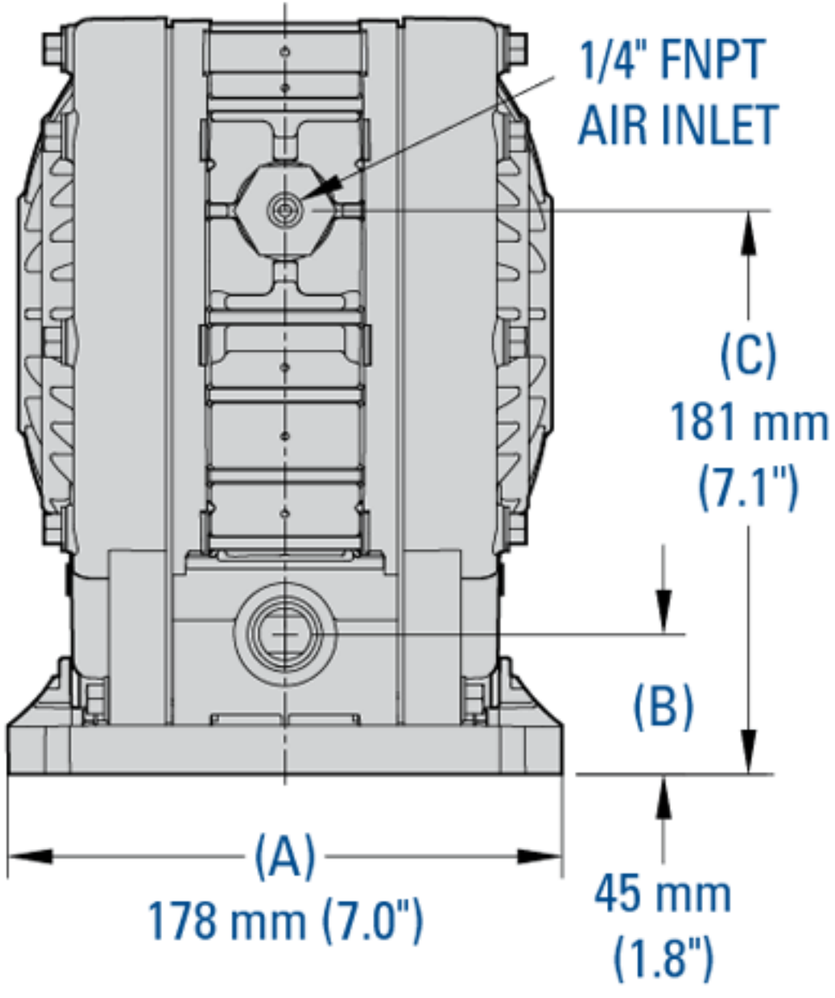
1/4" FNPT
AIR INLET
(C)
181 mm
(7.1")
(B)
(A)
178 mm (7.0")
45 mm
(1.8")

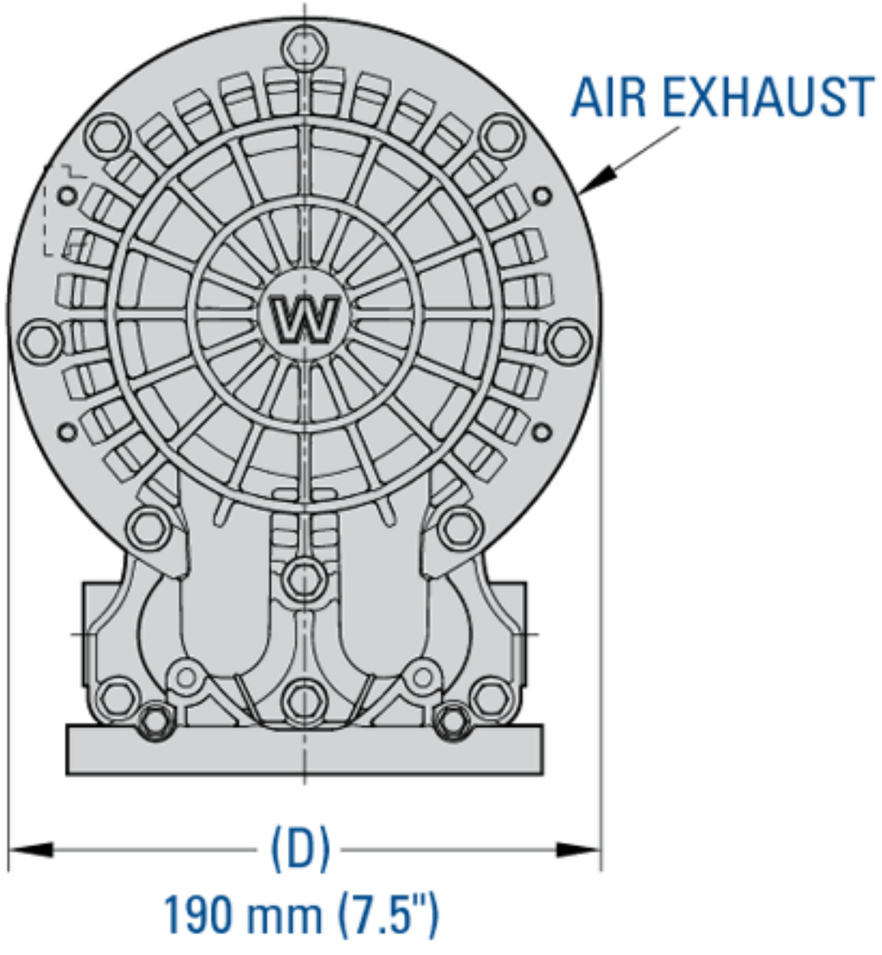
AIR EXHAUST
(D)
190 mm (7.5")